312312

12425

3 Hours / 70 Marks Seat No. | | | | | | | | |

Instructions :

(1) All Questions are *compulsory.*

(2) Answer each next main Question on a new page.

(3) Illustrate your answers with neat sketches wherever necessary.

(4) Figures to the right indicate full marks.

(5) Assume suitable data, if necessary.

(6) Use of Non-programmable Electronic Pocket Calculator is permissible.

(7) Mobile Phone, Pager and any other Electronic Communication devices are not permissible in Examination Hall.

Marks

1. Attempt any FIVE of the following : 10

(a) State ideal machine and write its any two characteristics.

(b) Define Statics and Dynamics.

(c) Write relation between resultant and equilibrant.

(d) Define angle of repose.

(e) State the centroid of semicircle and show it on the sketch.

(f) State V.R. of geared pulley block.

(g) Define force and state its S.I. unit.

2. Attempt any THREE of the following : 12

(a) In a simple lifting machine, a load of 1400 N is lifted by 50 N effort. While load moves up by 0.2 m, the point of application of effort moves by 6 m. Find MA, VR, efficiency and ideal effort.

(b) Calculate efficiency of screw jack having diameter of effort wheel as 300 mm and pitch as 6 mm and can lift a load of 1200 N using effort of 200 N.

(c) For a certain machine, VR is 125. To lift a load of 11.90 kN, an effort of 190 N is required. Calculate the effort required to lift a load of 72 kN and identify the type of machine.

(d) Explain law of machine. State its use.

3. Attempt any THREE of the following : 12

(a) A weight of 1.25 kN is attached by two ropes as shown in fig. 1. Calculate the tension in the ropes.

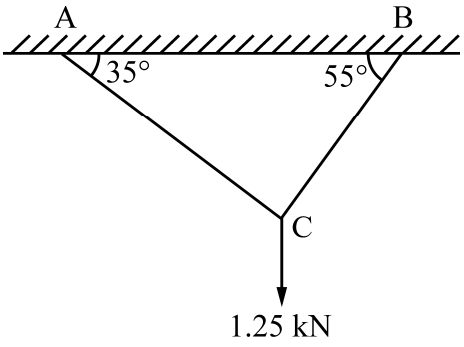

Fig. 1

(b) From following fig. 2 find the support reactions for given simply supported beam.

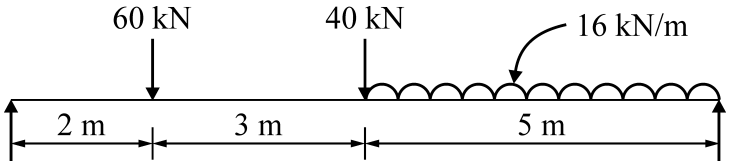

Fig. 2

(c) For a beam shown in fig. 3 calculate reaction at roller support and hinge support by analytical method.

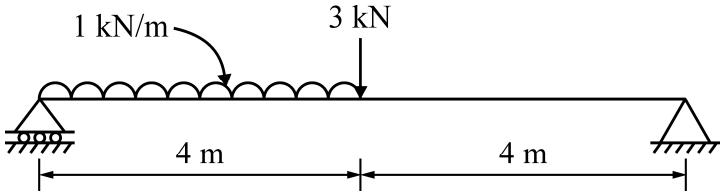

Fig. 3

(d) State Lami's theorem and its limitations.

4. Attempt any THREE of the following : 12

(a) Determine the resultant of the coplanar non-concurrent forces as shown in fig. 4.

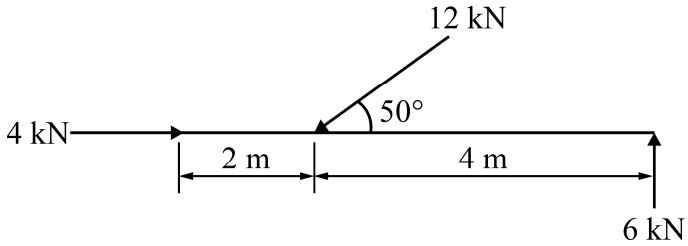

Fig. 4

(b) Find the value of μ if the body is in limiting equilibrium as shown in fig. 5.

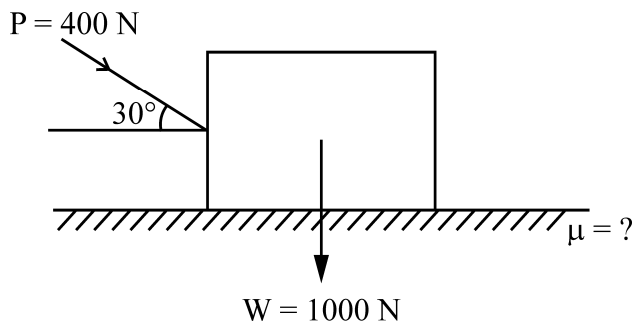

Fig. 5

(c) Locate the position of centroid for a shaded lamina as shown in fig. 6.

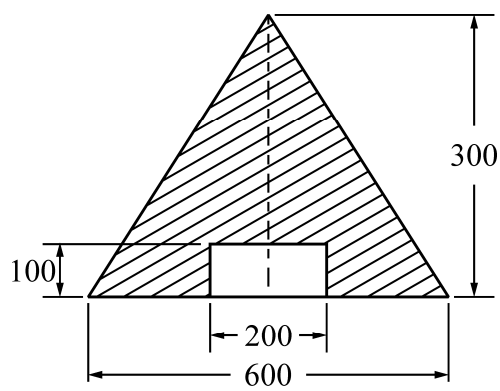

Fig. 6

(d) Locate graphically the position of resultant force for parallel force system as shown in fig. 7 with respect to point A.

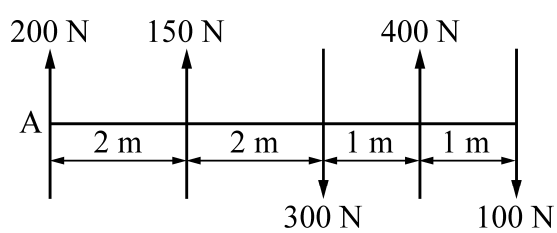

Fig. 7

(e) A solid sphere of 18 cm in diameter is placed on the top of a cylinder which is also 18 cm in diameter and 40 cm high such that their axes coincide. Find the center of gravity of the combination. Refer fig. 8.

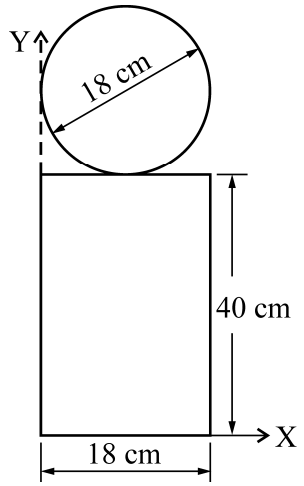

Fig. 8

5. Attempt any TWO of the following : 12

(a) A block is resting on a rough inclined plane whose inclination to the horizontal is 15°. The force of 11 N applied parallel to the plane on which block is resting will just move it down. If the coefficient of friction between the block and the plane is 0.40, estimate the weight of the block.

(b) Calculate analytically the magnitude and direction of resultant for concurrent force system as shown in fig. 9.

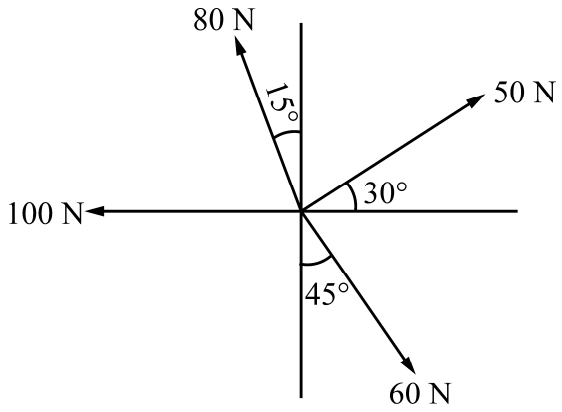

Fig. 9

(c) A triangle having sides AB = BC = CA = 2 m. Calculate the resultant and its position with respect to point A for the force system as shown in fig. 10.

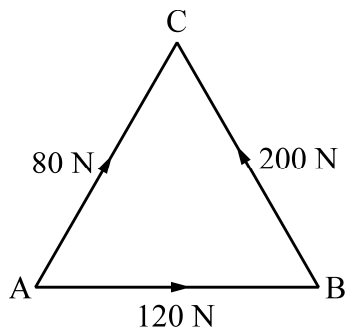

Fig. 10

6. Attempt any TWO of the following : 12

(a) A block weighing 300 N is resting on an inclined plane making an angle of 30° with the horizontal. Calculate the pull applied parallel to the plane to move the block up the plane if co-efficient of friction is 0.35.

(b) Calculate the position of centroid from bottom left corner 'B' for a retaining wall as shown in fig. 11.

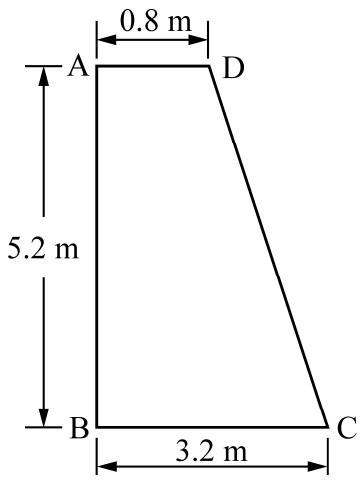

Fig. 11

(c) Find the centroid on an inverted T-section with flange 200 mm × 10 mm and web of 300 mm × 10 mm.